GRAPHIC DEVELOPMENT	MMD
Product name	
Project name	
Project no.	
Finishing	Folded sheet
Scale	1:1
Size Speads	594 (W) x 210 (H) m m
Size	148.5 (W) x 210 (H) mm
Operator(s)	
Date amended	
VERSION No .	13

APPROVAL	
QC Lithographer	
Product Manage	
Date Check	

ARTW ORK DOCUMENT				
Paper	80gsm White, woodfree coated			
Numbers of colours	2Cx2C			
	Pantone 300c	-	-	Black
Spotcolor				
	-	-	-	-
Aftertreatment				
	-	-	-	-

- ☐ Cr opping
- ☐ Coating
- ☐ Varnishing
- ☐ Embossing
- ☐ Cutterguide
- ☐ Die-cut
- ☐ Binding
- ☐ Glue

4

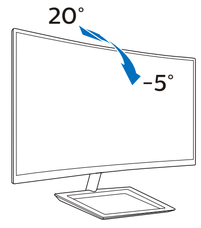

PHILIPS

EN Need help?
Online help: www.philips.com/support
Go to above online help for the latest SmartControl software.

FR Besoin d'Aide ?
Aide en ligne: www.philips.com/support
Rendez-vous sur l'assistance en ligne mentionnée ci-dessus pour obtenir le logiciel SmartControl le plus récent.

ES ¿Necesita ayuda?
Ayuda en línea: www.philips.com/support
Vaya a la ayuda en línea de arriba para obtener el software SmartControl más actualizado.

DE Benötigen Sie Hilfe?
Online-Hilfe: www.philips.com/support
Rufen Sie für die aktuellste SmartControl-Software die obige Online-Hilfe auf.

IT Avete bisogno di aiuto?
Guida in linea: www.philips.com/support
Accedere alla guida online di cui sopra per il software SmartControl piú recente

BR Precisa ajuda?
Ajuda online: www.philips.com/support
Vá para a ajuda on-line acima para obter o software SmartControl mais recente.

KO 도움이 필요하십니까?
온라인 도움말: www.philips.com/support
온라인 도움말의 최신 SmartControl 소프트웨어로 이동하십시오.

SC 需要帮助?
在线帮助: www.philips.com/support
有关最新SmartControl软件，请转到上面的线上帮助。

UK Потребуєте допомоги?
Підтримка он-лайн: www.philips.com/support
Найновіше ПЗ SmartConrol подано вище у "Допомога онлайн".

RU Нужна помощь?
Интерактивная справка: www.philips.com/support
Воспользуйтесь приведенной выше интерактивной справкой к новейшему ПО SmartControl.

TR Yardıma ihtiyacınız var mı?
Online yardım: www.philips.com/support
En son SmartControl yazılımı için yukarıdaki çevrimiçi yardıma gidin.

HI क्या सहायता की जरूरत है?
ऑनलाईन सहायता: www.philips.com/support
नवीनतम SmartControl सॉफ्टवेयर के लिए ऊपर बताए गए ऑनलाइन सहायता पर जाएं

AR هل تريد المساعدة؟
للمساعدة عبر الانترنت: www.philips.com/support
انتقل إلى التعليمات عبر الإنترنت أعلاه للحصول على أحدث إصدار من برنامج SmartControl.

JP ヘルプが必要ですか?
オンラインヘルプ: www.philips.com/support
最新のSmartControlソフトウェアについては、上記オンラインヘルプにアクセスしてください。

Version: M1272ECAQ1WWT

2019 © TOP Victory Investments Ltd. All rights reserved.

This product has been manufactured by and is sold under the responsibility of Top Victory Investments Ltd., and Top Victory Investments Ltd. is the warrantor in relation to this product. Philips and the Philips Shield Emblem are registered trademarks of Koninklijke Philips N.V. and are used under license.

Specifications are subject to change without notice.

HDMI trademark and related patents on technologies belong to their respective owners.

www.philips.com

272E1CA 271E1CA

Printed in China

Q41G27M181351C

PHILIPS

E line

27xE1C

Quick Start

Register your product and get support at
www.philips.com/welcome

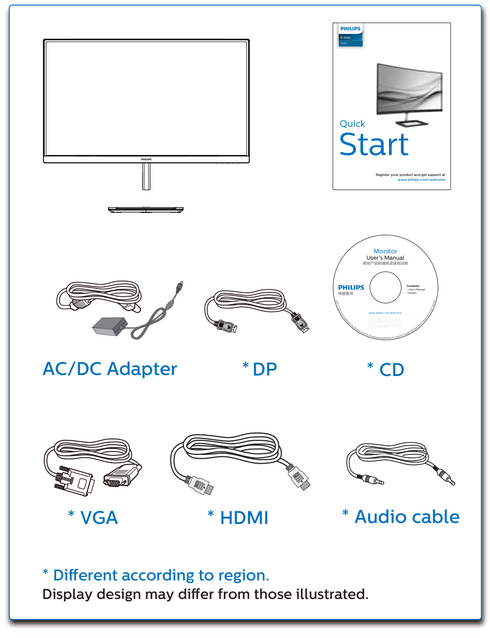

1

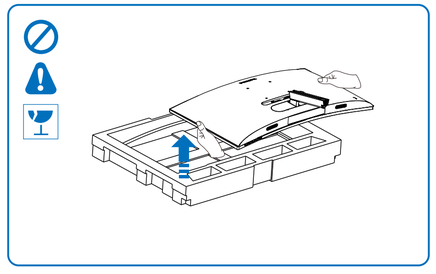

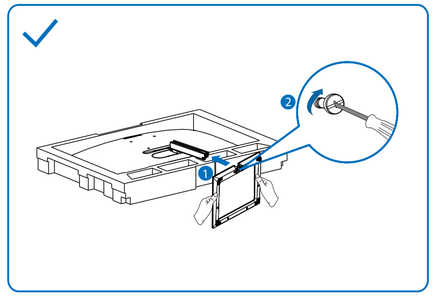

2

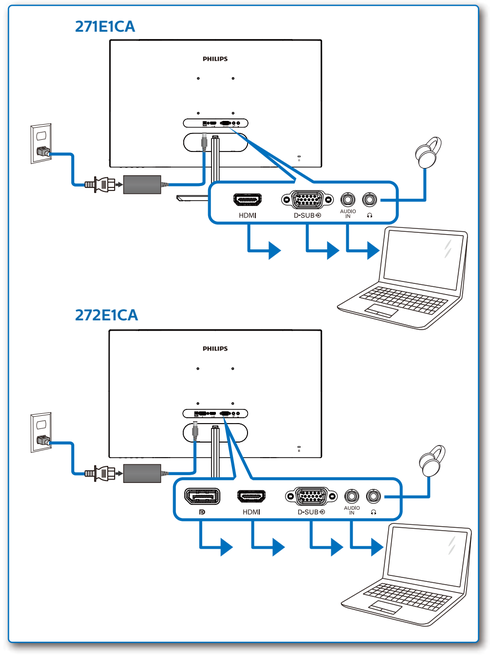
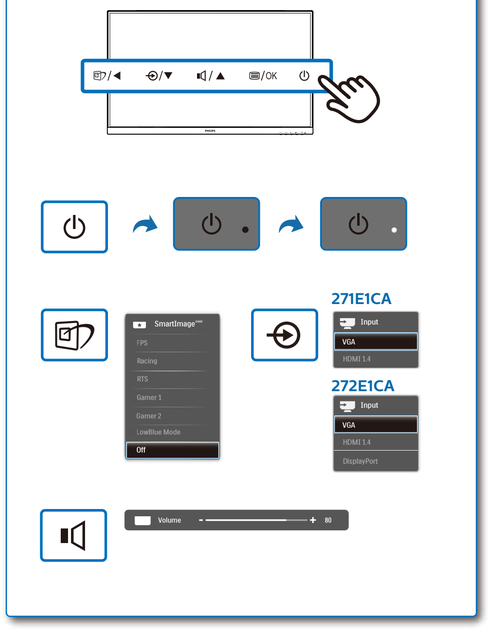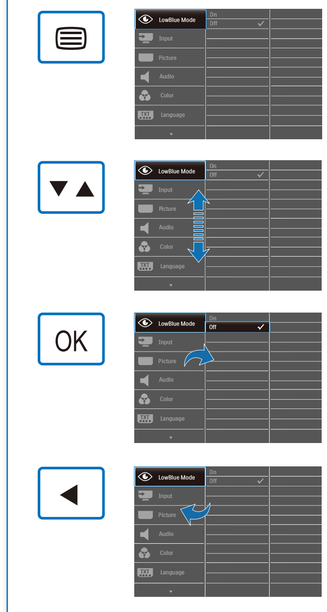
3