4

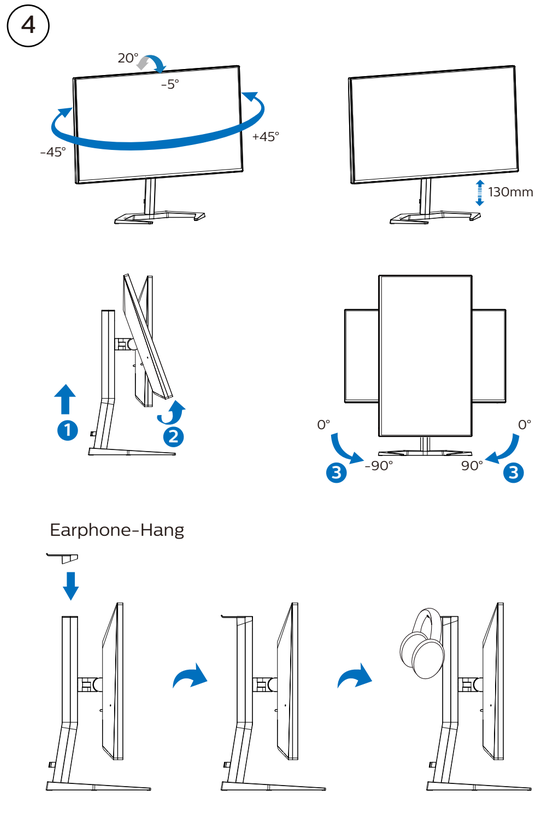

Earphone-Hang

Register your product and get support at
www.philips.com/support

FAQ

Software SmartControl

User Manual

Version: 27M1F5800Q1T
2021 © TOP Victory Investments Ltd. All rights reserved.

This product has been manufactured by and is sold under the responsibility of Top Victory Investments Ltd., and Top Victory Investments Ltd. is the warrantor in relation to this product. Philips and the Philips Shield Emblem are registered trademarks of Koninklijke Philips N.V. and are used under license.

Specifications are subject to change without notice.

The terms HDMI, HDMI High-Definition Multimedia Interface, and the HDMI Logo are trademarks or registered trademarks of HDMI Licensing Administrator, Inc.

www.philips.com

Energy Labelling
27M1F5800

Printed in China

F41G27M181346B----

PHILIPS

Gaming Monitor

Momentum **5000**

27M1F5800

Quick start

Register your product and get support at **www.philips.com/welcome**

Contents

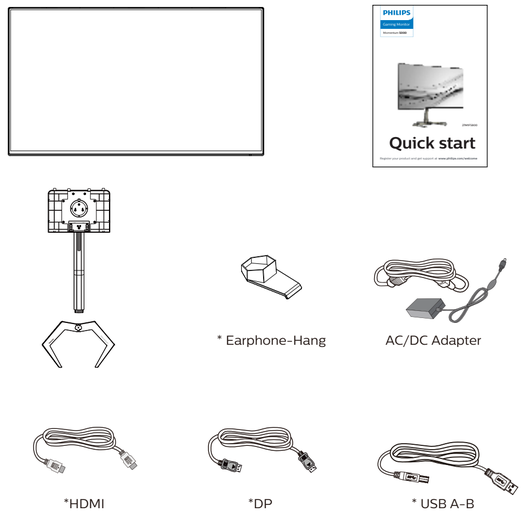

*Different according to region
Display design may differ from that illustrated

1

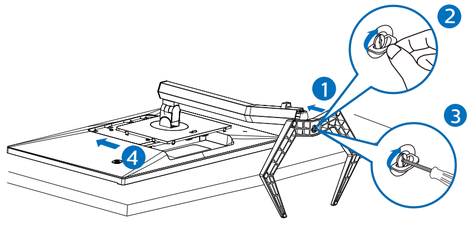

⚠ CAUTION: Place the monitor face down on a smooth surface. Pay attention not to scrath or damage the screen.

2

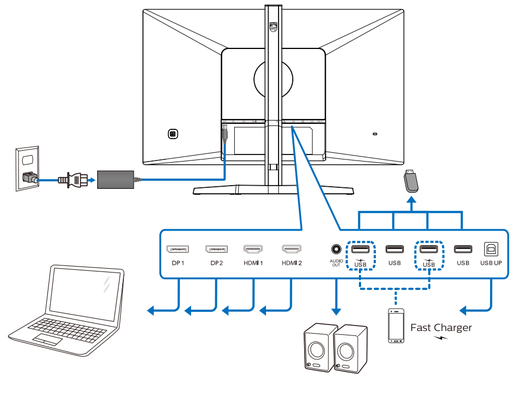

USB hub

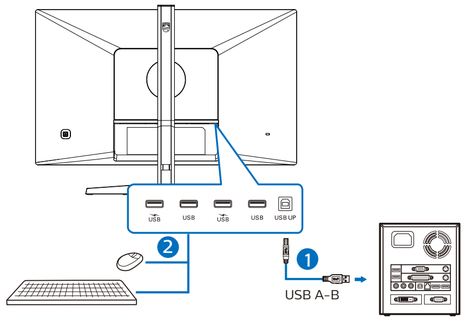

Multiview PBP

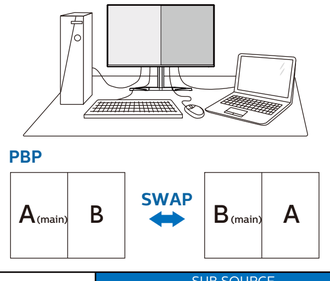

MultiView		SUB SOURCE POSSIBILITY (xl)			
	Inputs	HDMI 1	HDMI 2	DisplayPort 1	DisplayPort 2
MAIN SOURCE (xl)	HDMI 1	●	●	●	●
	HDMI 2	●	●	●	●
	DisplayPort 1	●	●	●	●
	DisplayPort 2	●	●	●	●
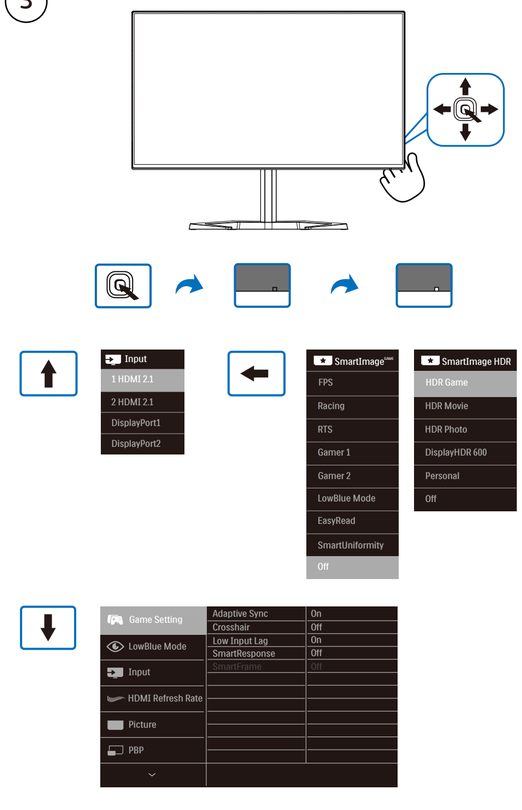
3