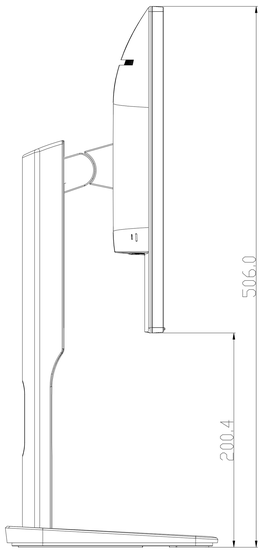

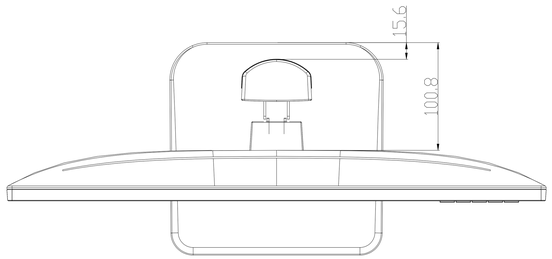

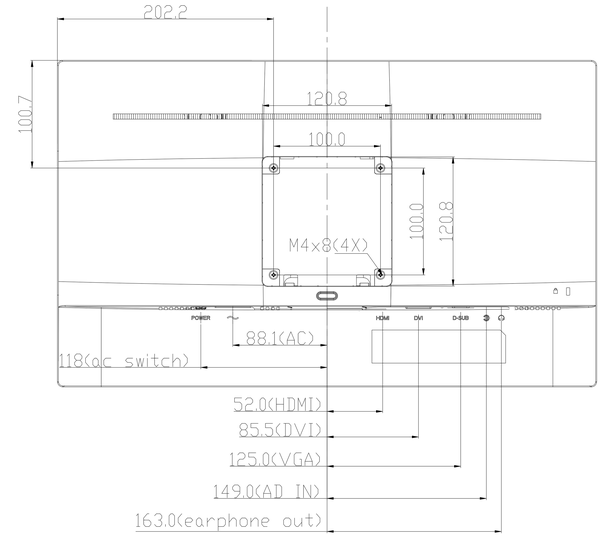

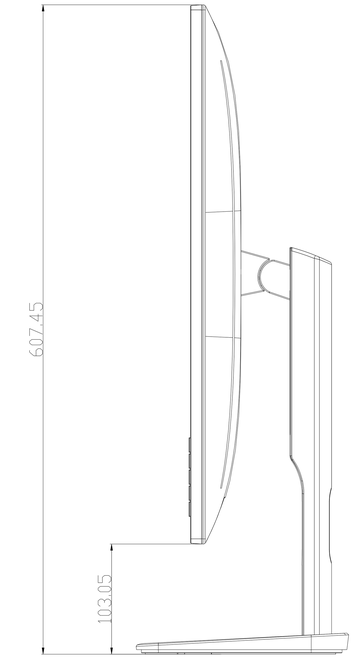

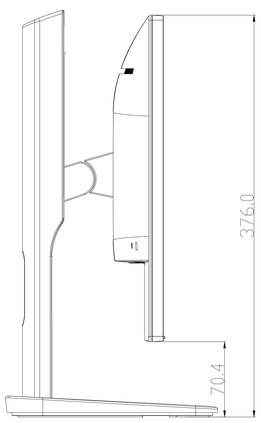

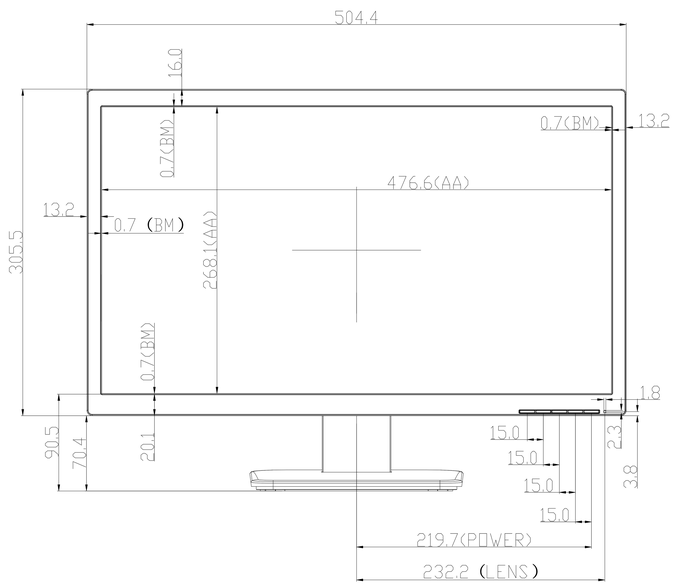

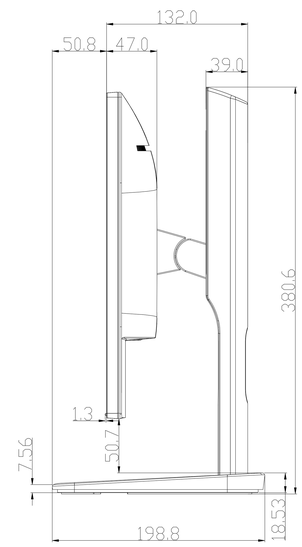

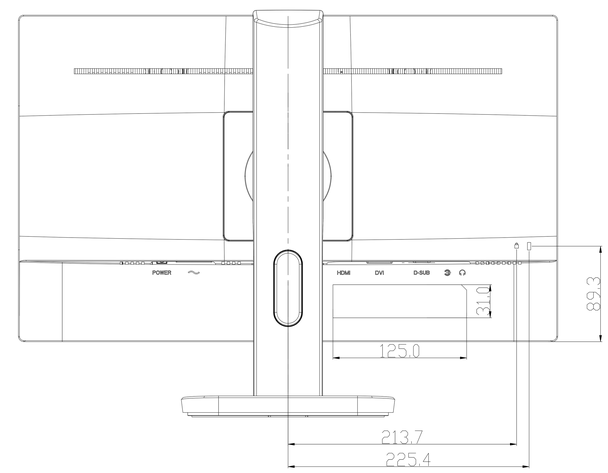

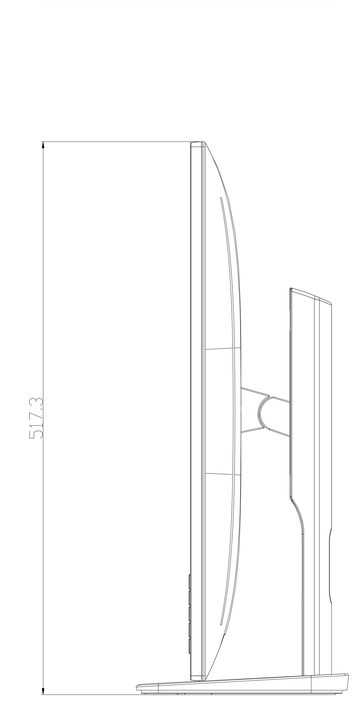

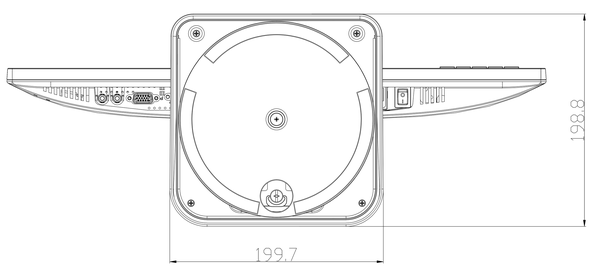

MODEL : 22P1D		DRAWING :	
22P1D			01 UPDATE MODEL NAME
NAME Monday.Zhou	SUPERS .		
TY	CHECK	DATE 2018-03-29	