U2718Q Outline Dimension

Norminal Dimension
Unit: mm(inch)

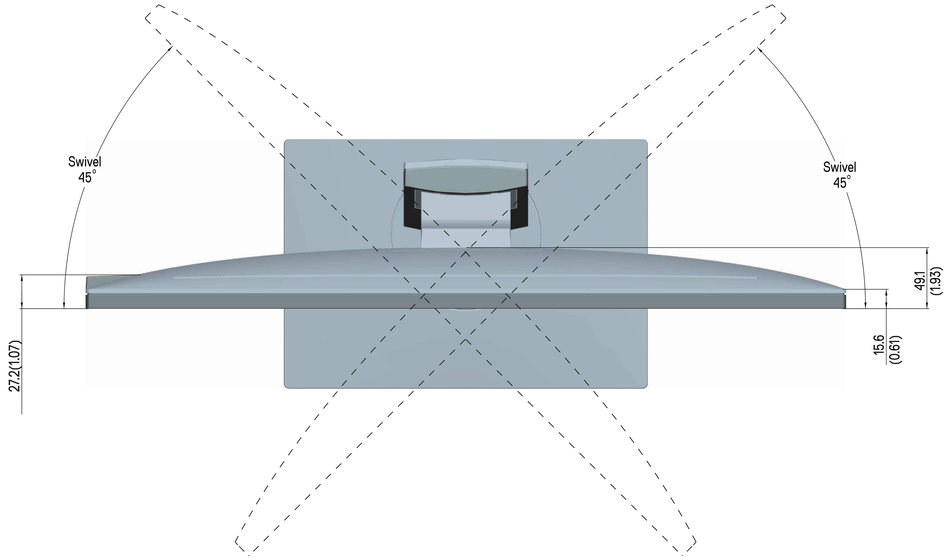

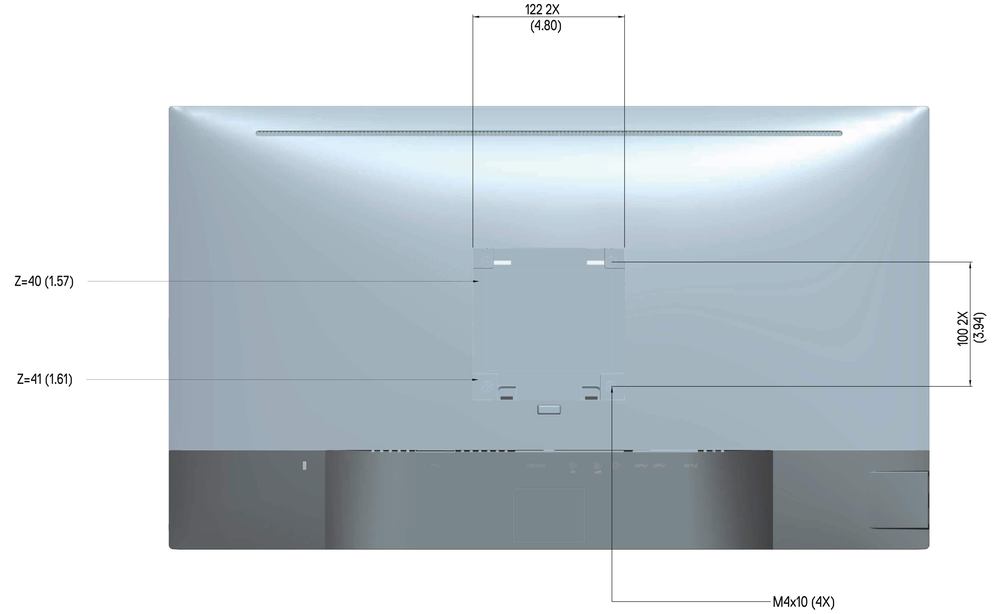
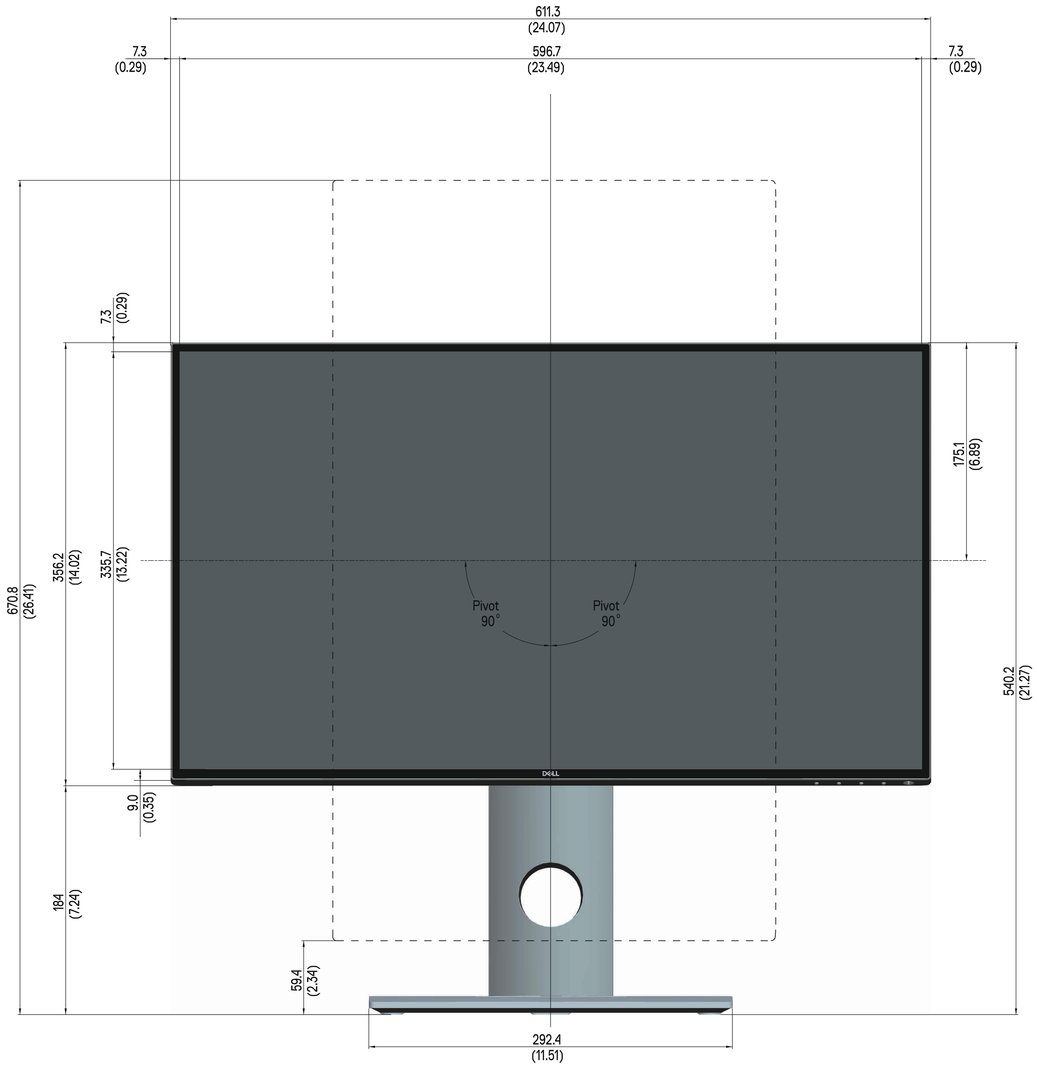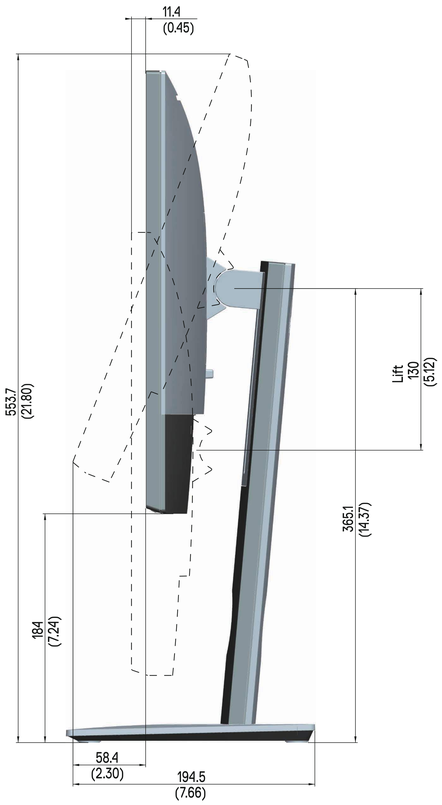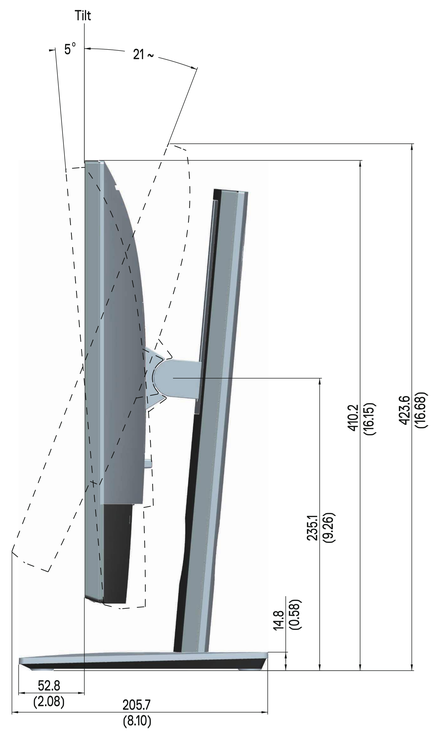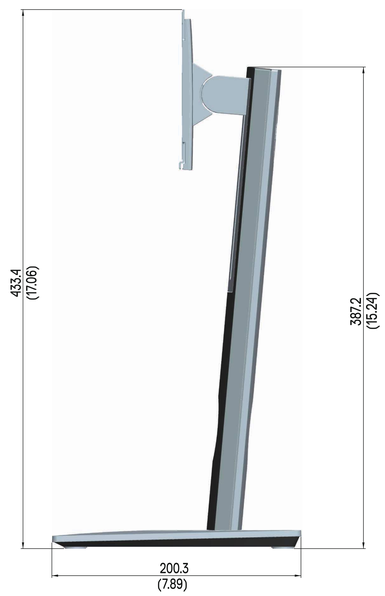
Back View of Monitor without stand