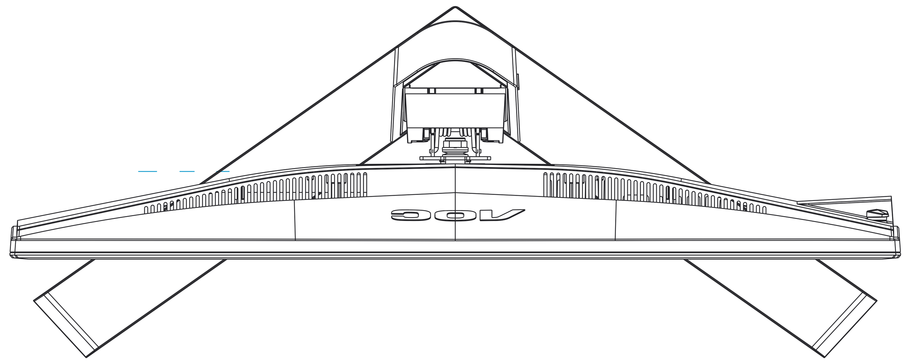

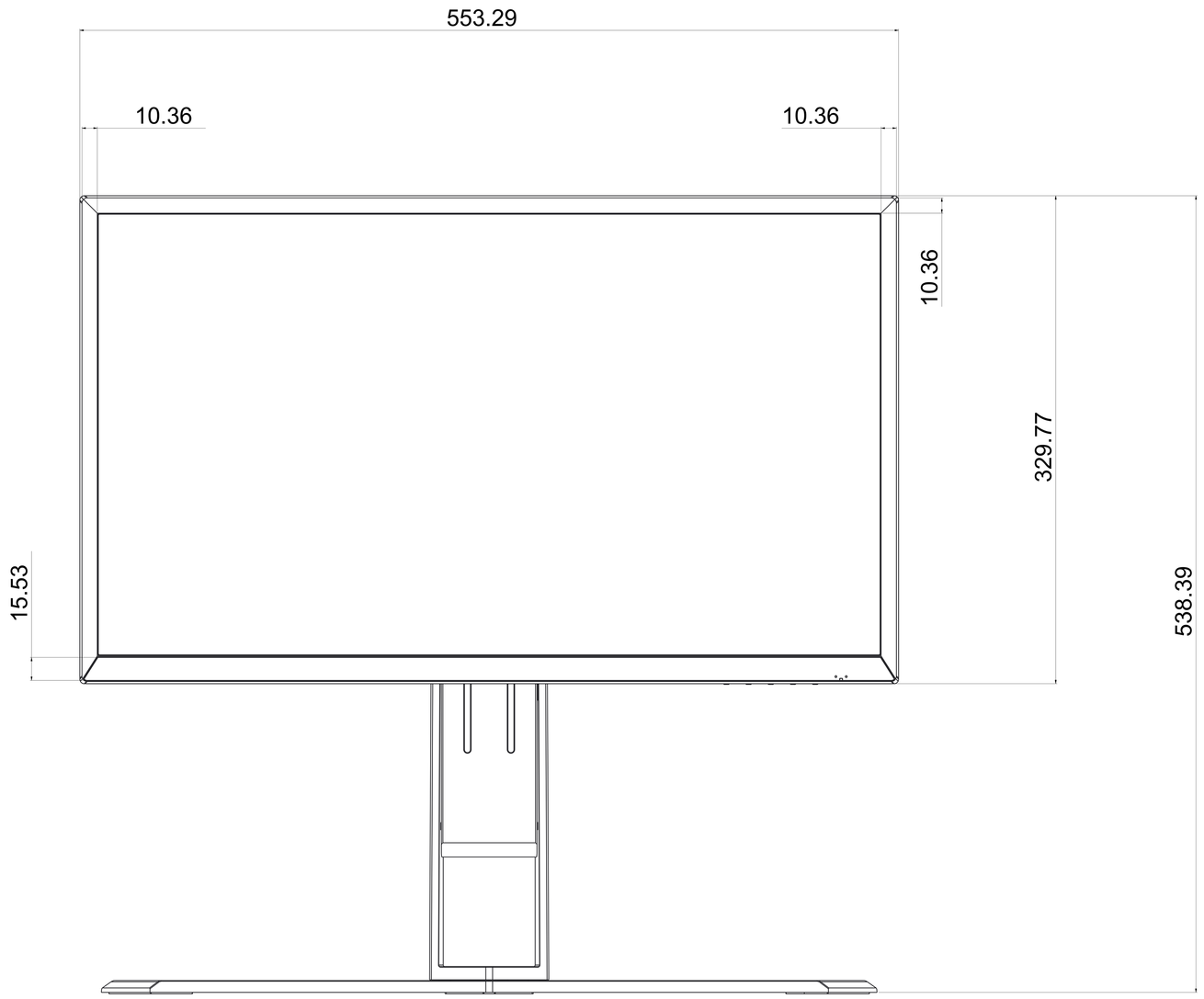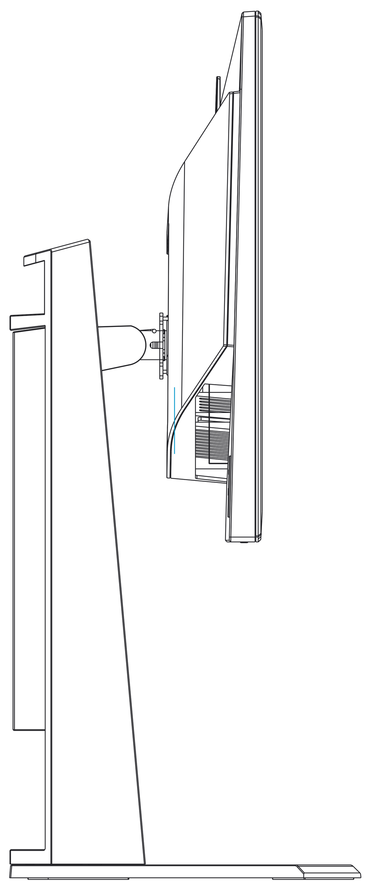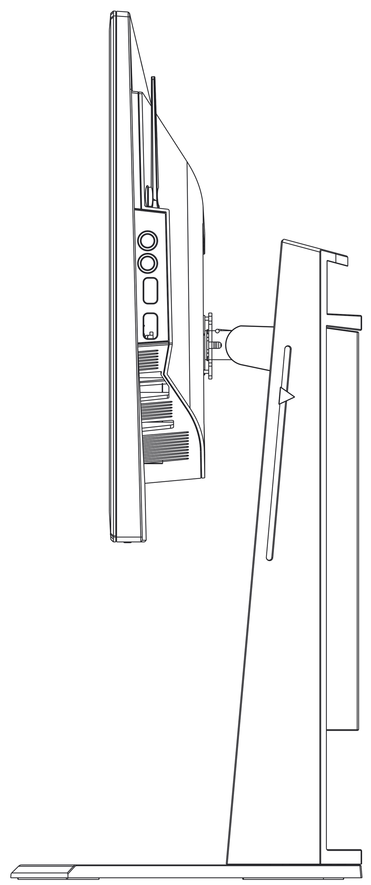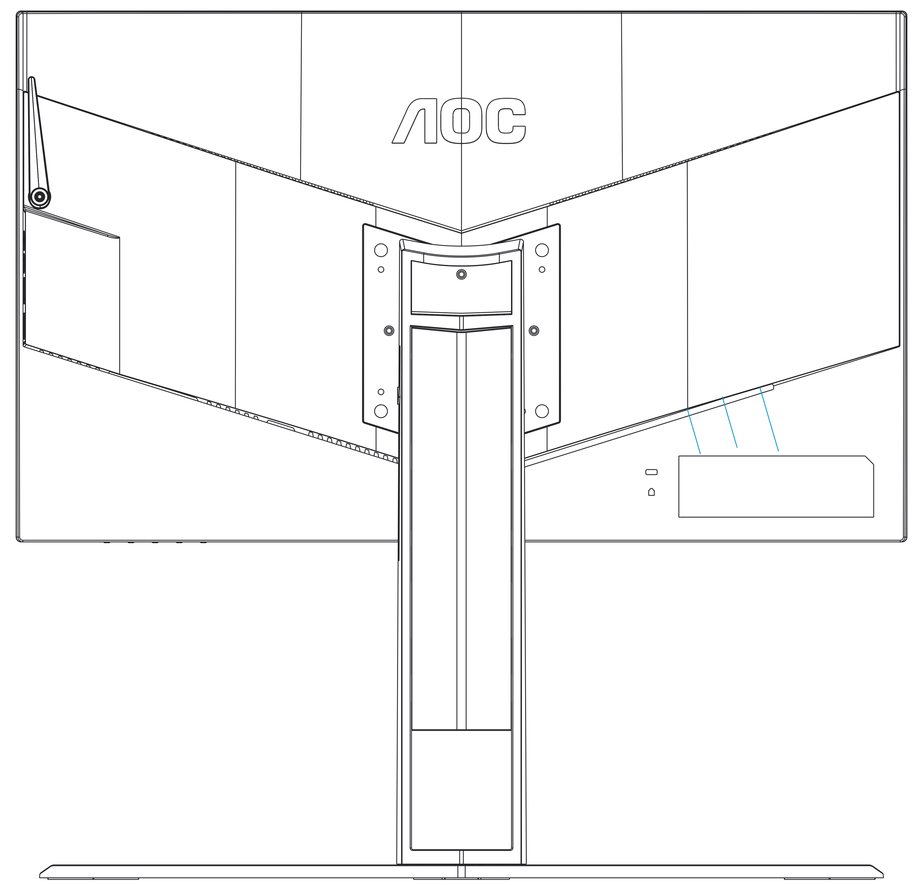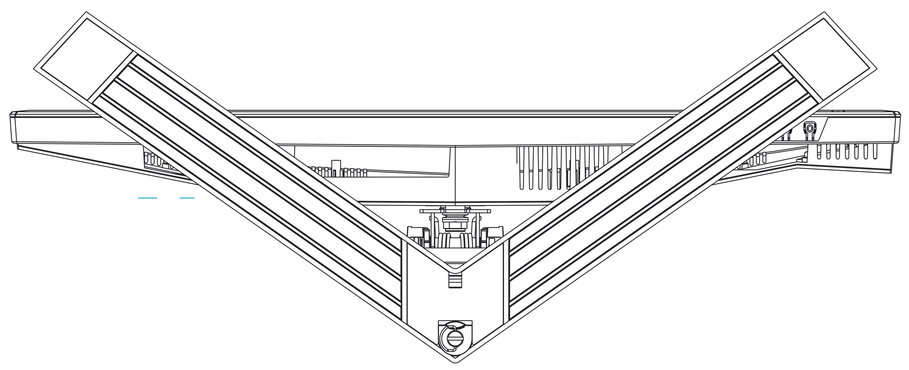
553.29
10.36
10.36
10.36
329.77
15.53
538.39