C2422HE Outline Dimension

Unit: mm(inch)
Dimension: Nominal
Scale: Not to scale

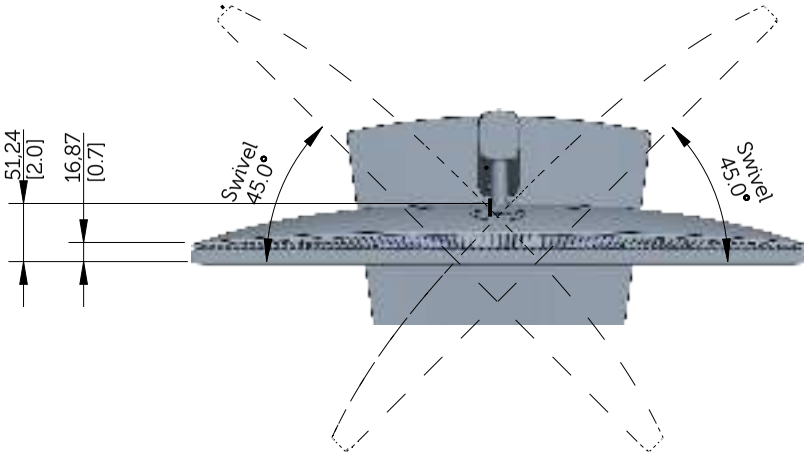

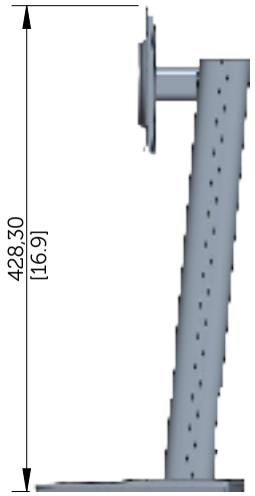

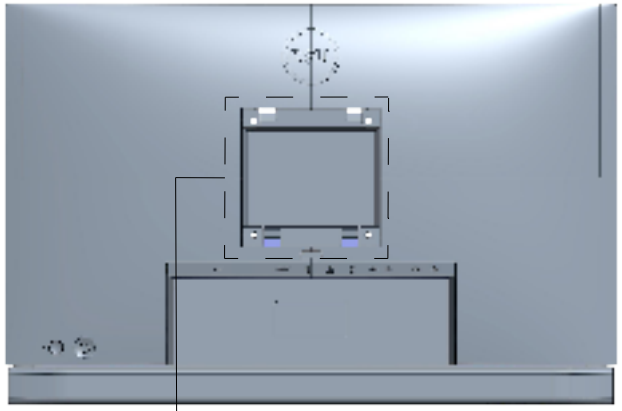

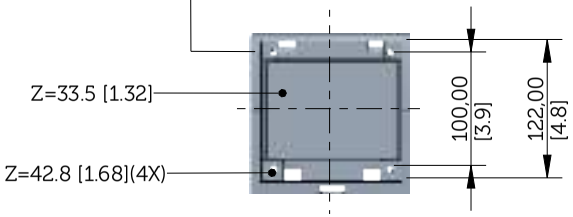

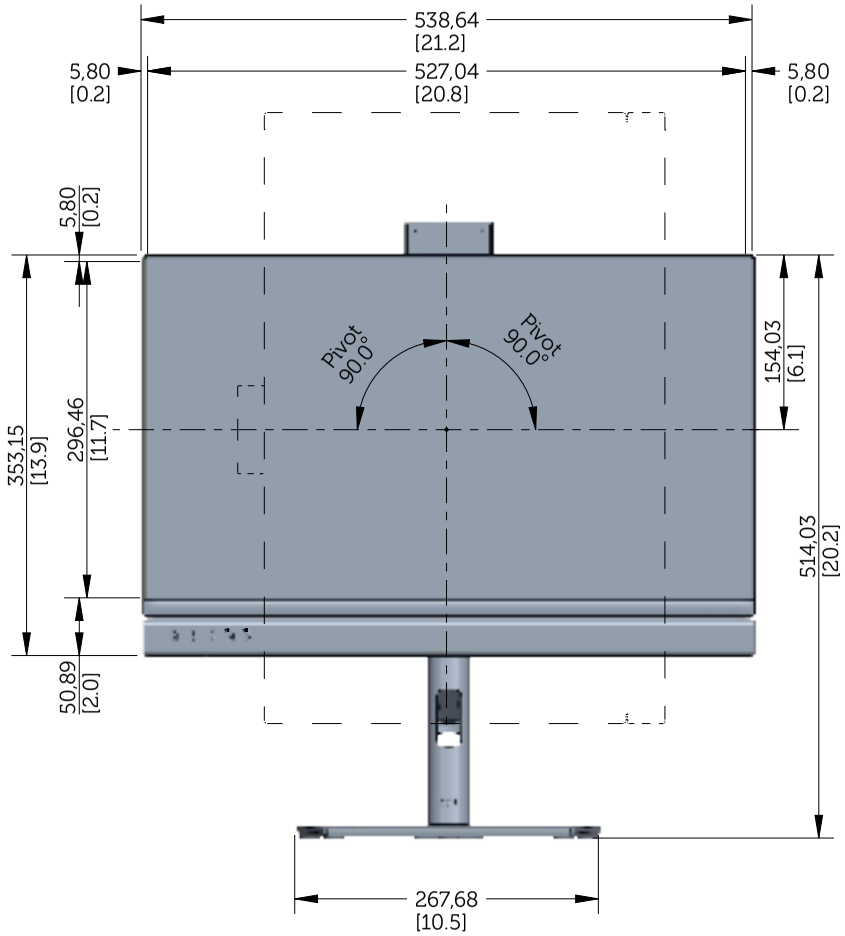

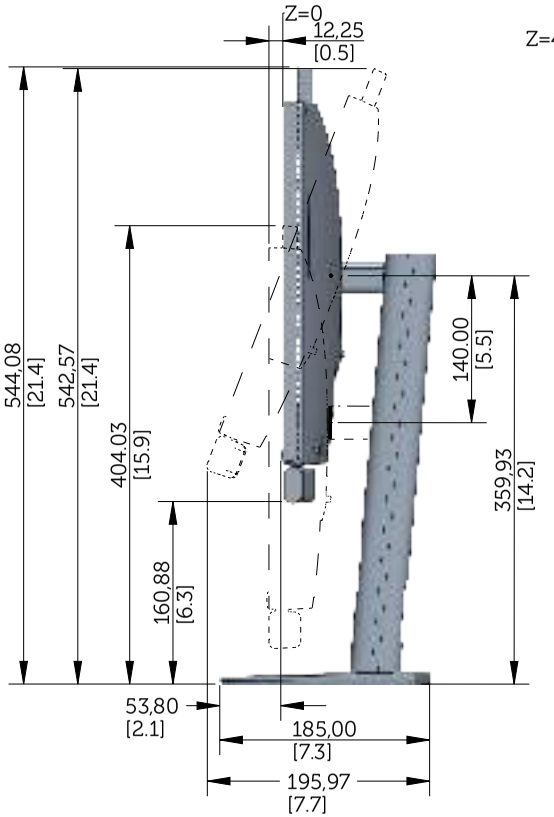
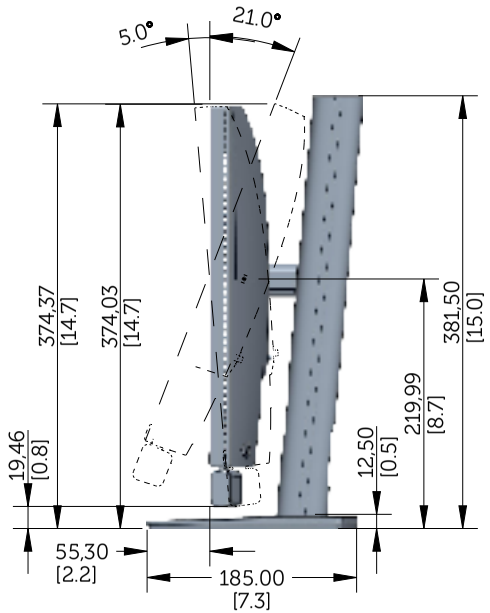
Tilt