REVISION RECORD							
ITEM	ECN NO.	POSITION	DESCRIPTION WAS	IS	DATE	UPDATED BY	APPROVED BY

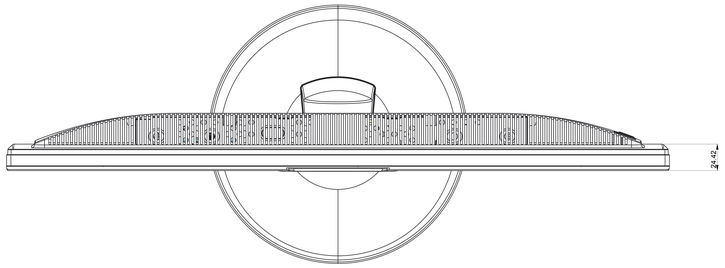

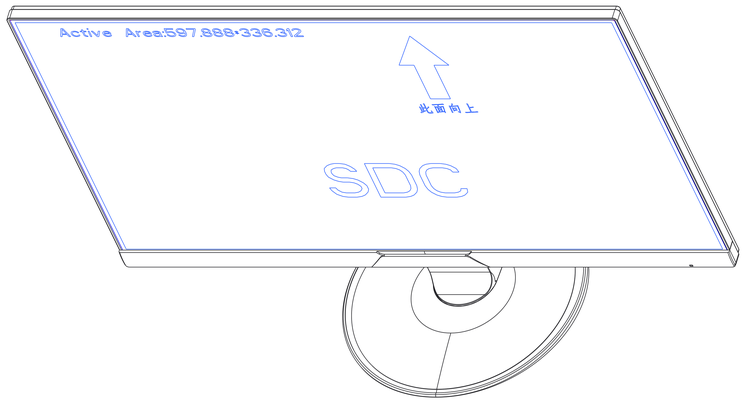

SCALE 1:1

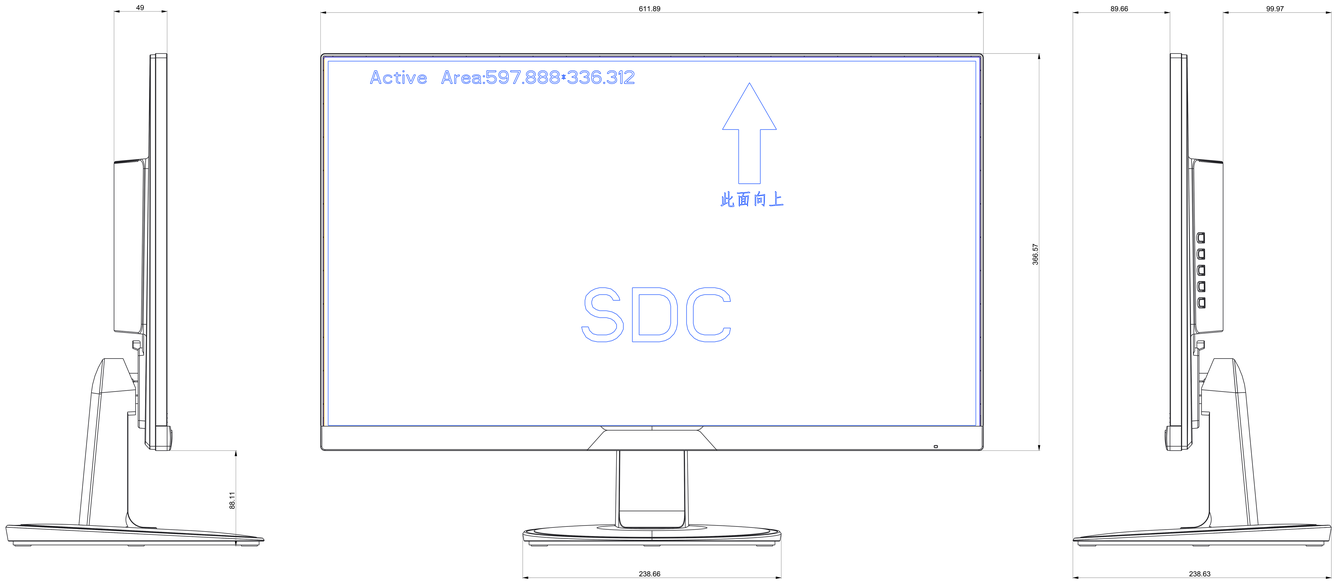

SCALE 1:1

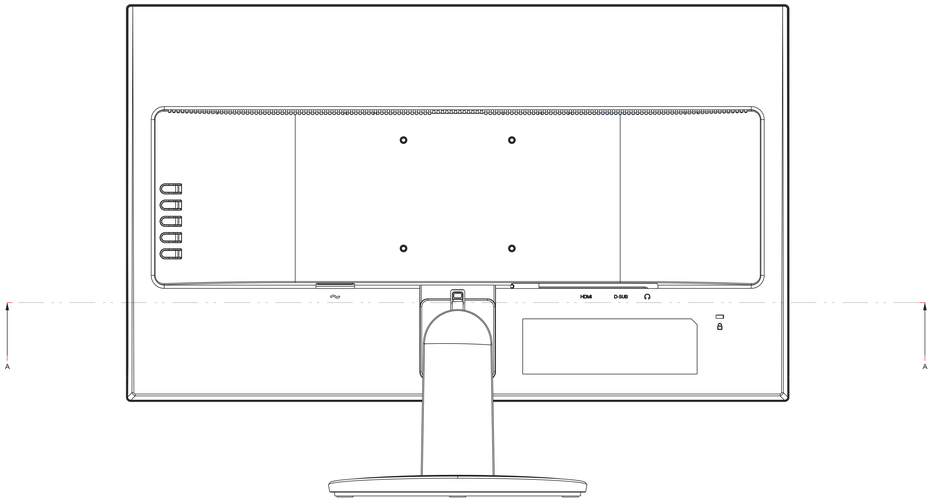

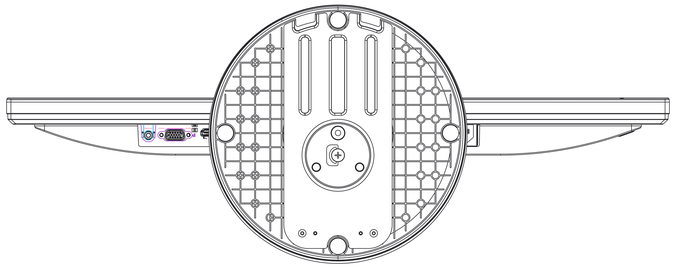

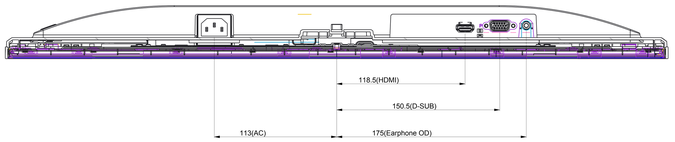

SECTION A-A

RoHS Compliant

TOLERANCE UNLESS OTHERWISE SPECIFIED (mm)			
RANGE OF DIM	METAL & PLASTIC	POLYFOAM	CARTON
0~30	±0.10		
30~80	±0.15		
80~120	±0.20	±0~2.0	
120~300	±0.25		±2.0~0
300~600	±0.30		
600~1000	±0.40	±0~3.0	
1000~2000	±0.50	±0~4.0	
ANGLE (SHEET METAL)		8.0°	
Internal Diameter of Plastic Screw Boss		6.05	

MODEL: F27S5H_SH191	PROE 3D: 000_F27S5H_ALL_ASM / PROE 2D: AOC_F27S5H_SH191
UNIT: mm	TOLERANCE UNLESS OTHERWISE SPECIFIED DIMENSIONS ANGLE
SCALE: 1:1	1st PROJ.
DRAWN: Frank Huang DATE: May-02-12	
CHECK: DATE:	

TPV Technology Ltd

SHEET 1 OF 1

SIZE: A3 | DWG NO: | REV: MN1